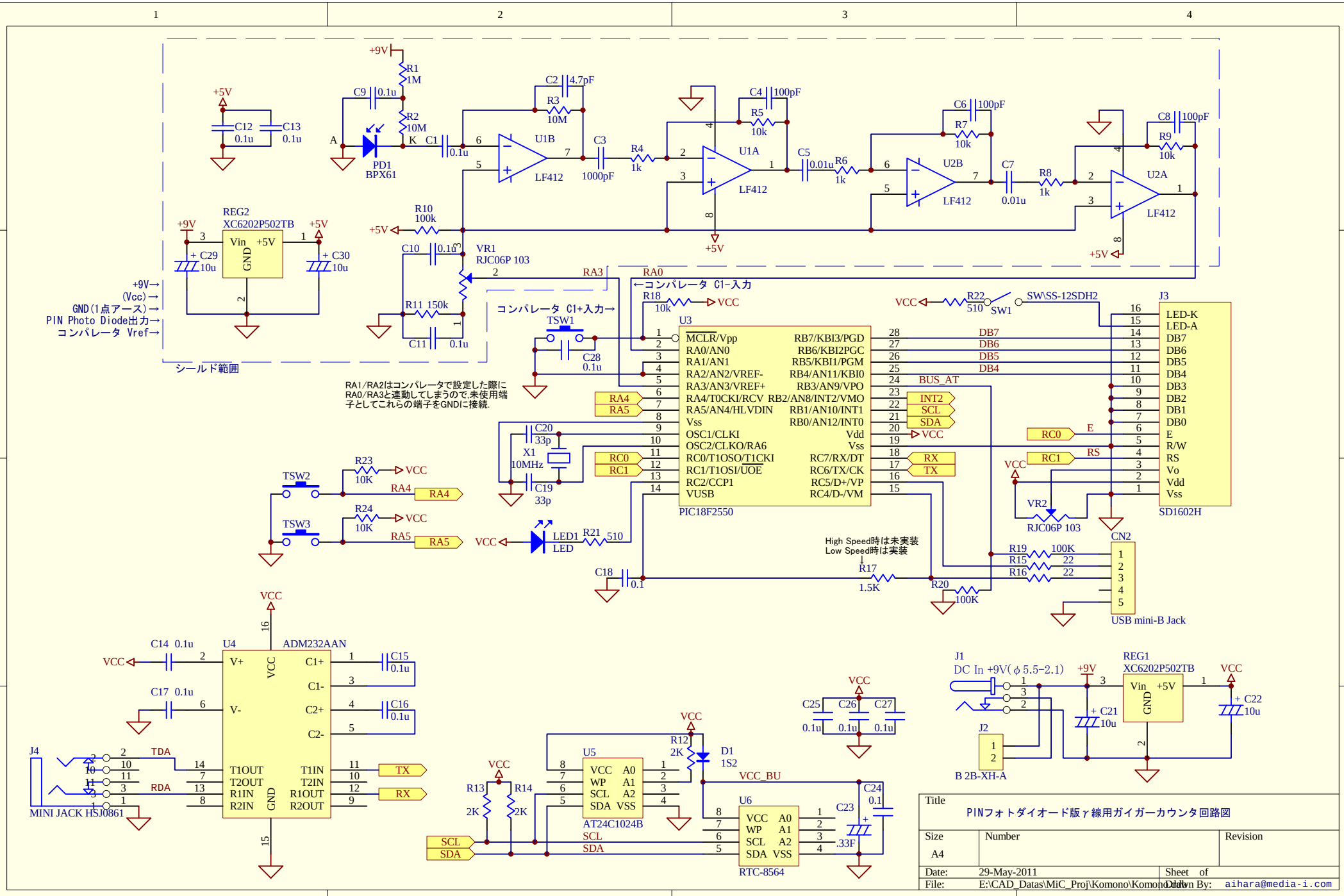
+9V
R1 1M
R2 10M
C9 0.1u
PD1 BPX61
A
K
C1 0.1u
C2 4.7pF
R3 10M
U1B LF412
C3 1000pF
R4 1k
U1A LF412
C4 100pF
R5 10k
C5 0.01u
R6 1k
U2B LF412
C6 100pF
R7 10k
C7 0.01u
R8 1k
U2A LF412
C8 100pF
R9 10k
+5V
C12 0.1u
C13 0.1u
REG2 XC6202P502TB
Vin +5V GND
C29 10u
C30 10u
R10 100k
C10 0.1u
VR1 RJC06P 103
R11 150k
C11 0.1u
+9V→
(Vcc)→
GND(1点アース)→
PIN Photo Diode出力→
コンパレータ Vref→
シールド範囲
RA3
RA0
←コンパレータ C1-入力
コンパレータ C1+入力→
R18 10k
VCC
TSW1
C28 0.1u
U3
MCLR/Vpp
RA0/AN0
RA1/AN1
RA2/AN2/VREF-
RA3/AN3/VREF+
RA4/T0CKI/RCV
RA5/AN4/HLVDIN
Vss
OSC1/CLKI
OSC2/CLKO/RA6
RC0/T1OSO/T1CKI
RC1/T1OSI/UOE
RC2/CCP1
VUSB
RB7/KBI3/PGD
RB6/KBI2PGC
RB5/KBI1/PGM
RB4/AN11/KBI0
RB3/AN9/VPO
RB2/AN8/INT2/VMO
RB1/AN10/INT1
RB0/AN12/INT0
Vdd
Vss
RC7/RX/DT
RC6/TX/CK
RC5/D+/VP
RC4/D-/VM
PIC18F2550
RA4
RA5
RC0
RC1
INT2
SCL
SDA
RX
TX
BUS_AT
DB7
DB6
DB5
DB4
C20 33p
X1 10MHz
C19 33p
R22 510
SW1
SW\SS-12SDH2
J3
LED-K
LED-A
DB7
DB6
DB5
DB4
DB3
DB2
DB1
DB0
E
R/W
RS
Vo
Vdd
Vss
SD1602H
VR2 RJC06P 103
TSW2
TSW3
R23 10K
R24 10K
LED1 LED
R21 510
C18 0.1
High Speed時は未実装
Low Speed時は実装
R17 1.5K
R20 100K
R19 100K
R15 22
R16 22
CN2
USB mini-B Jack
U4 ADM232AAN
C14 0.1u
C17 0.1u
C15 0.1u
C16 0.1u
V+
V-
C1+
C1-
C2+
C2-
T1OUT
T2OUT
R1IN
R2IN
T1IN
T2IN
R1OUT
R2OUT
TDA
RDA
J4
MINI JACK HSJ0861
U5 AT24C1024B
U6 RTC-8564
R12 2K
D1 1S2
VCC_BU
R13 2K
R14 2K
C24 0.1
C23 .33F
C25 0.1u
C26 0.1u
C27 0.1u
J1 DC In +9V(φ5.5-2.1)
J2 B 2B-XH-A
REG1 XC6202P502TB
C21 10u
C22 10u
Title
PINフォトダイオード版γ線用ガイガーカウンタ回路図
Size A4
Number
Revision
Date: 29-May-2011
Sheet of
File: E:\CAD_Datas\MiC_Proj\Komono\Komono.sch
Drawn By: aihara@media-i.com